DRAWING NO. SD035209

REV	DATE	DESCRIPTION	ECO	BY	C'H'K.
F	07/09/2015 00:00:00 AM	ADDED NOTE "DO NOT USE PAT644 OR Y644 TOOLING WITH 6 AWG SOL"	40916	SPR	MA

CATALOG NUMBER (11)	STRANDED COPPER CONDUCTOR ACCOMMODATED: CODE (AWG)	NAVY	METRIC SIZE (CLASS 2)	BOLT SIZE	METRIC BOLT SIZE	DIMENSIONS: B	C	E	K DIA.	L	N	O.D.	T REF.	Z MIN.
YA6CL2TC10E1	#6 STR #6 SOL	-----	-----	#10	----	.54 [14]	.42 [11]	1.00 [25]	.21 [5]	2.32 [59]	.25 [6]	.29 [7]	.09 [2]	.27 [7]
YA6C2L51				#10	----		.42 [11]	.50 [13]	.21 [5]	1.79 [46]	.22 [6]		.09 [2]	.27 [7]
YA6CL2TC10				#10	----		.42 [11]	.62 [16]	.21 [5]	1.94 [49]	.25 [6]		.09 [2]	.27 [7]
YA6CL2TC10E2				#10	----		.42 [11]	.75 [19]	.21 [5]	2.07 [53]	.25 [6]		.09 [2]	.27 [7]
YA6C2L52				1/4	M6		.45 [11]	.50 [13]	.27 [7]	1.88 [48]	.25 [6]		.08 [2]	.33 [8]
YA6C2L				1/4	M6			.62 [16]		2.01 [51]	.25 [6]			.34 [9]
YA6CL2TC14E				1/4	M6			.50 [13]		1.94 [49]	.31 [8]			.33 [8]
YA6CL2TC14				1/4	M6			.62 [16]		2.07 [53]	.31 [8]			
YA6CL2TC14G1 (13)				1/4	M6			.62 [16]		2.07 [53]				
YA6CL2TC14E2				1/4	M6			.75 [19]		2.19 [56]				
YA6CL2TC14E1				1/4	M6		.45 [11]	1.00 [25]	.27 [7]	2.44 [62]	.31 [8]		.08 [2]	.33 [8]
YA6CL2TC38				3/8	----		.58 [15]	1.00 [25]	.39 [10]	2.63 [67]	.41 [10]		.06 [2]	.42 [11]
YA6CL2TC38E10				3/8	----	.54 [14]	.58 [15]	1.25 [32]	.41 [10]	2.88 [73]	.41 [10]	.29 [7]	.06 [2]	.42 [11]

CONNECTOR SIZE	TOLERANCES: B	C	E	K DIA.	L	N	O.D.
-8C THRU -25	±.06	±.04	±.02	±.02	±.09	±.03	±.01
-26 THRU -34	±.08	±.04	±.02	±.02	±.12	±.03	±.01
-35 AND UP	±.09	±.06	±.02	±.02	±.15	±.06	±.01

TOLERANCE BLOCK

INSTALLATION TOOLING (# CRIMPS)

CATALOG NO.	COLOR CODE	DIE INFORMATION: DIE INDEX	TYPE	MECHANICAL: YIMRTC (6) YI22CMR	OUR840	MD6 MD7	MD6--R2 MD7-34R	HYDRAULIC: Y500CT PAT600 PATMD6	Y34A Y34B Y34BH (8) (5)	Y35, Y39 Y750, PAT750 (5)	Y46 PAT46 (4) (5)	Y45 (3) (5)	Y48B	Y60BHU	DIELESS (# CRIMPS)	WIRE STRIP LENGTH
ALL LISTED ABOVE	(13) BLUE	7 374	BLUE DIE SET	BLUE (1)	X5CRT(1) X8CART(1)	W5CRT(1) W5CVT(1)	W5CRT(1) W5CVT(1)	X5CRT (1) X8CART(1) W5CRT (1) W5CVT (1)	----	U5CRT(1) U8CABT(1)	U5CRT(1) U8CABT(1)	U5CRT(1) U8CABT(1)	----	----	MECHANICAL: MY29-3(1) MY29-11(1) MRC840(1) HYDRAULIC: Y81KFT(1) (14) Y4PC834(1) Y644(1)	5/8"
			NEST	----	----	----	----	----	B6CD(1) A6CD(1)	U6CD-1(1)	U6CD-1(1)	U6CD-1(1)	----	----		
			INDENTOR						Y34PR	Y34PR	Y34PR	Y34PR				

NOTES:

1. MATERIAL: COPPER TUBING.
2. FINISH: TIN PLATED.
3. (3) CATALOG # PT6515 ADAPTOR IS REQUIRED TO USE "U" DIES IN Y45 SERIES TOOLS.
4. (4) CATALOG # PUADP-1 ADAPTOR IS REQUIRED TO USE "U" DIES IN Y46 SERIES TOOLS.
5. (5) Y35P3 INDENTOR ADAPTOR REQUIRED FOR Y34PR INDENTOR.
6. (6) PERMANENT DIE IN TOOING.
7. DIMENSIONS IN BRACKETS [ ] ARE IN MILLIMETERS ROUNDED OFF TO THE NEAREST MILLIMETER UNLESS OTHERWISE NOTED, AND ARE FOR REFERENCE ONLY.
8. (8) FOR USE BY CUSTOMERS THAT HAVE THIS HYPRESS.™ NO NEW Y34A HYPRESS™ TOOLS ARE BEING PROCESSED. Y34A USES A--D TYPE NEST DIES.
9. (9) CONNECTORS ARE "UL" LISTED; UNDRILLED VERSIONS ARE NOT "UL" LISTED.
10. (10) CONNECTORS ARE "CSA" CERTIFIED; UNDRILLED VERSIONS ARE NOT "CSA" CERTIFIED.
11. (11) FOR UNDRILLED VERSIONS ADD SUFFIX "-U" TO END OF CATALOG NUMBER. FOR UNDRILLED VERSIONS, USE D MIN. = N MAX. + E MIN. + Z MIN.
12. "X", "W-RT", "W-VT", "U", & "L" DIE SETS ARE COLOR CODED. "A", "B" & "C" DIES ARE NOT COLOR CODED. NESTS AND INDENTOR TYPE ARE NOT COLOR CODED.
13. (13) YA6CL2TC14G1 DOES NOT HAVE COLOR CODE.
14. (14) DO NOT USE PAT644 OR Y644 TOOLING WITH 6 AWG SOL.

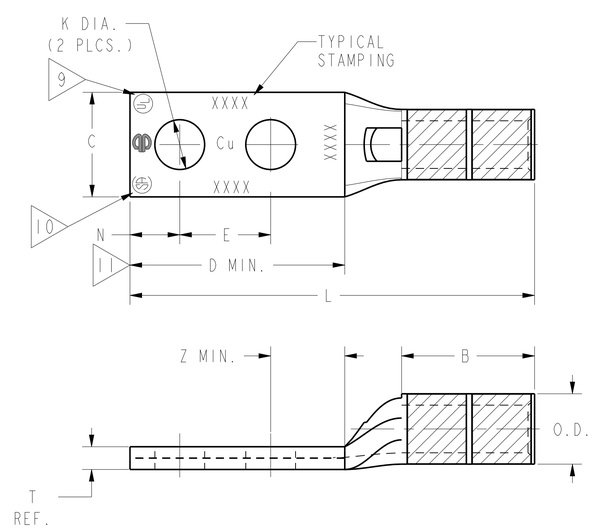

REFERENCE : SE209512
SUPERSEDES : SC91923

HYLUG™

ITEM NO:	N/A
CAT. NO:	YA6C-2L-, YA6CL-2TC- (TABLE)
DRAWN BY:	J.MICHAUD 11/18/94
CHECKER:	D.FILLION 11/18/94
DSN APPVL:	C.PALAGI 10/24/94
MFG APPVL:	-- --
QA APPVL:	C.ACKERMAN 11/17/94
MKT APPVL:	-- --
PROD FAM:	CM&R COMPRESSION
PROJECT #:	--
DOCUMENT TYPE:	Sales
REL LEVEL:	Released
SIZE	D
SCALE:	NTS
DRAWING NO	SD035209
REV	F
SHEET 3 OF 18	

BURNDY

REV: PE0200